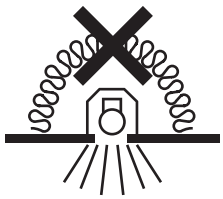

IS500
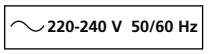
220-240 V 50/60 Hz

IK03
IP20
IP40

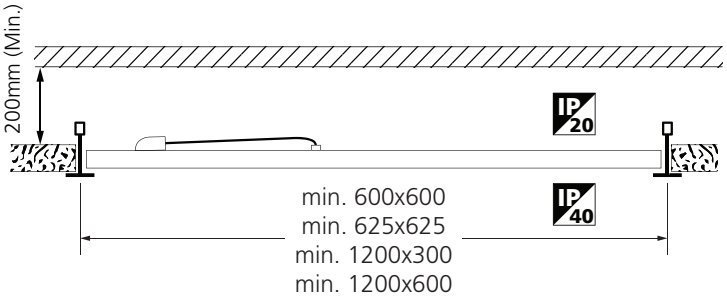
200mm (Min.)
IP20
IP40
min. 600x600
min. 625x625
min. 1200x300
min. 1200x600

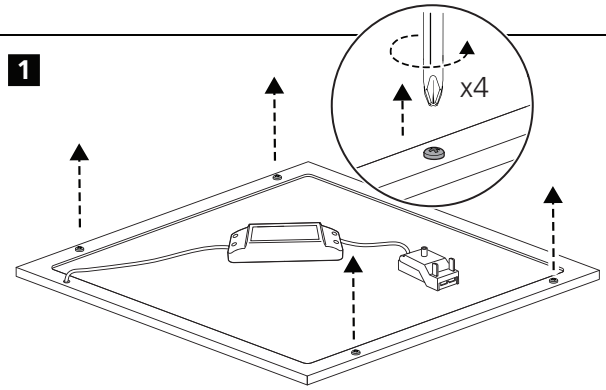
1
x4

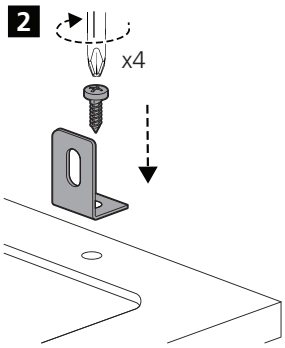
2
x4

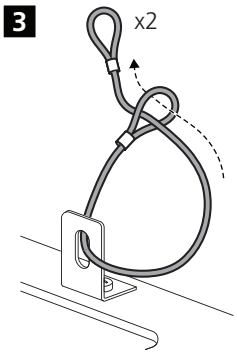
3
x2

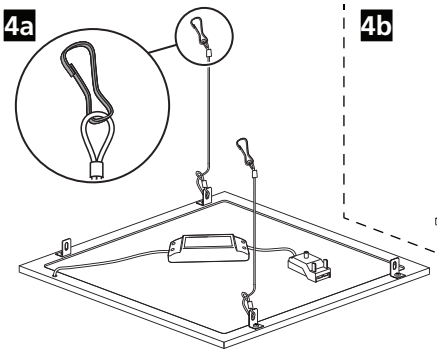
4a

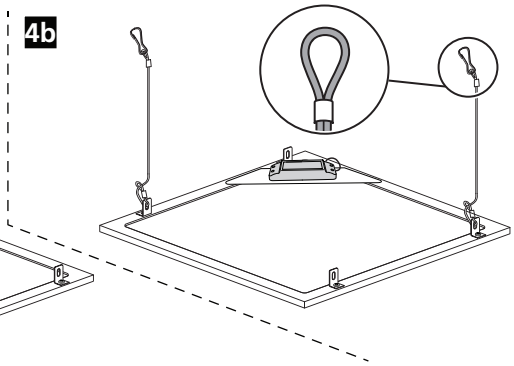
4b

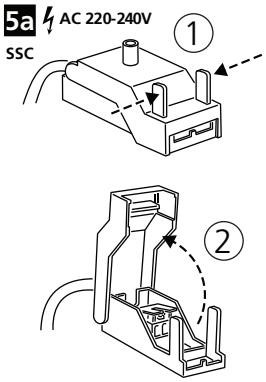
5a
AC 220-240V
SSC
1
2

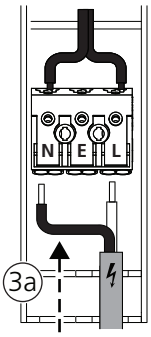
N E L
3a

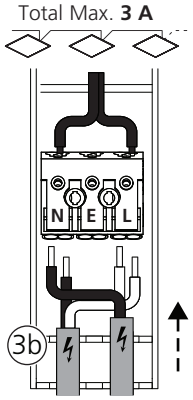
Total Max. 3 A
N E L
3b

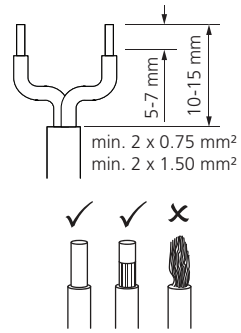
!
5-7 mm
10-15 mm
min. 2 x 0.75 mm²
min. 2 x 1.50 mm²

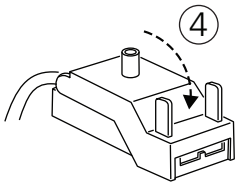
4

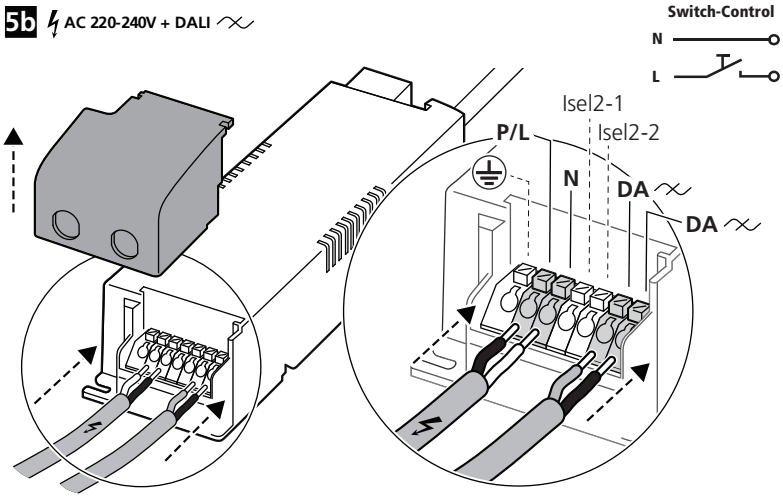
5b
AC 220-240V + DALI
Switch-Control
N
L
Isel2-1
Isel2-2
P/L
N
DA
DA

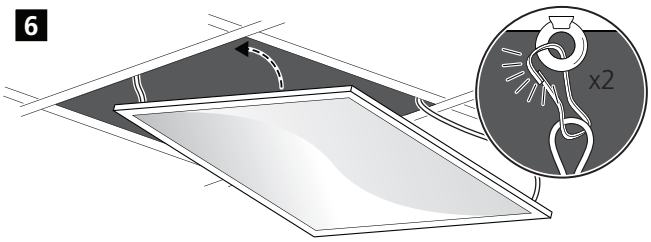
6
x2

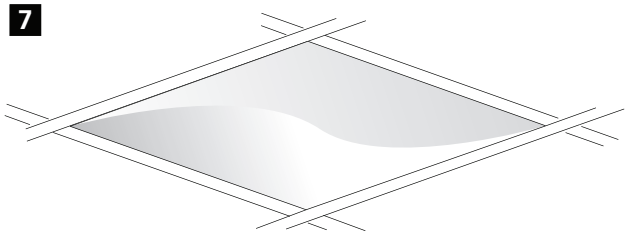
7

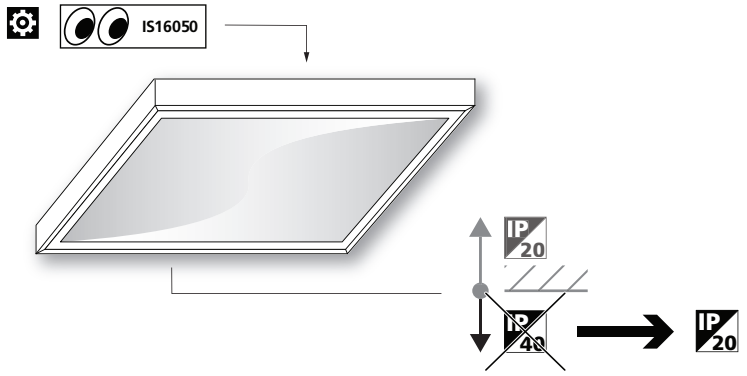
IS16050
IP 20
IP 40
IP 20

IS500

1

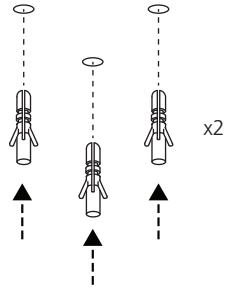

2

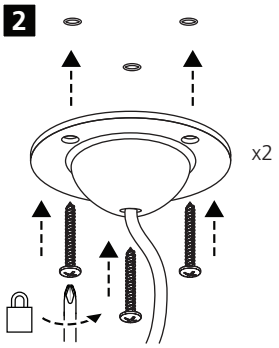

3a START Panel Flat

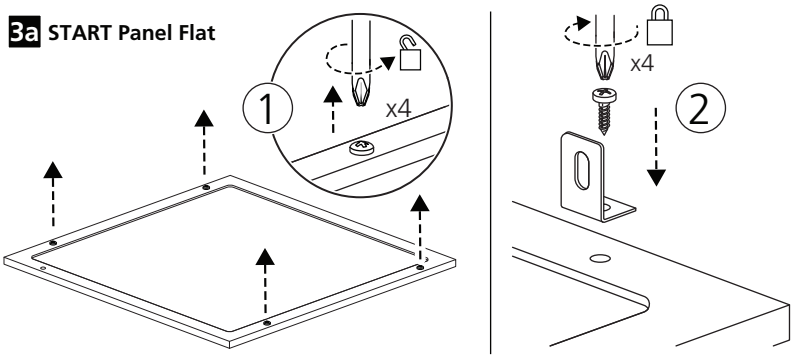

3b START eco Panel Flat

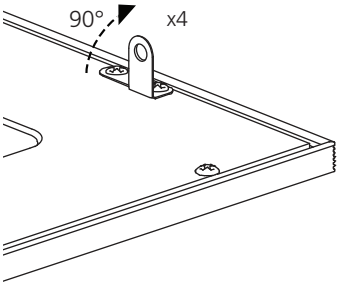

3c START eco Panel

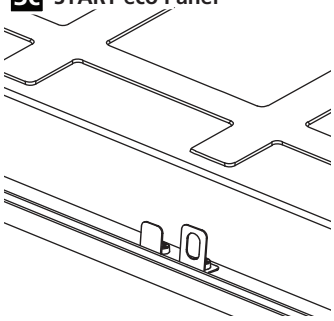

3d Quadro

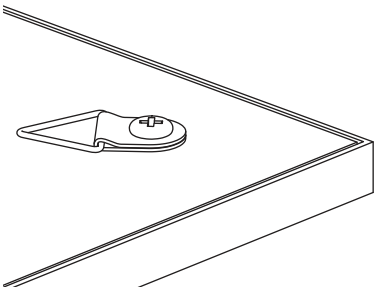

4a

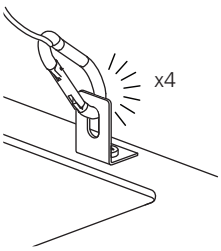

4b

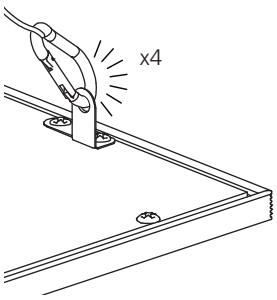

4c

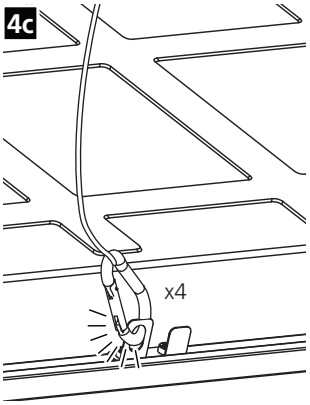

4d

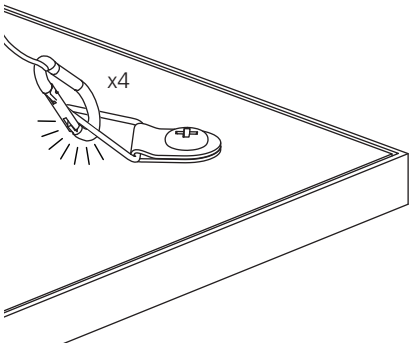

5 600 x 600 mm / 625 x 625 mm

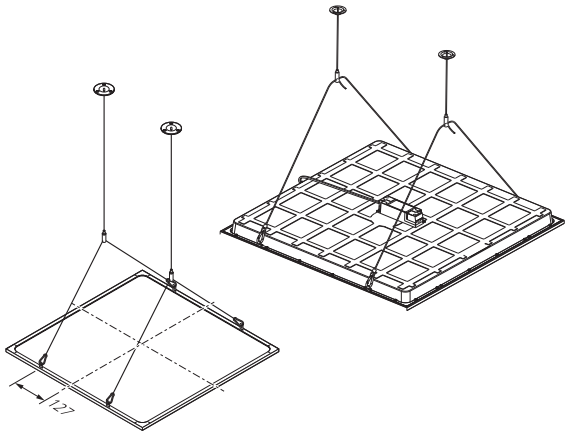
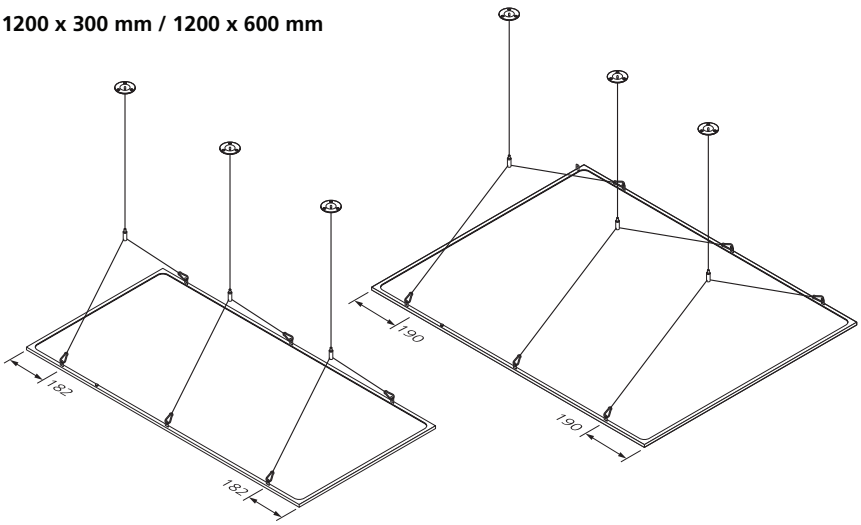
1200 x 300 mm / 1200 x 600 mm